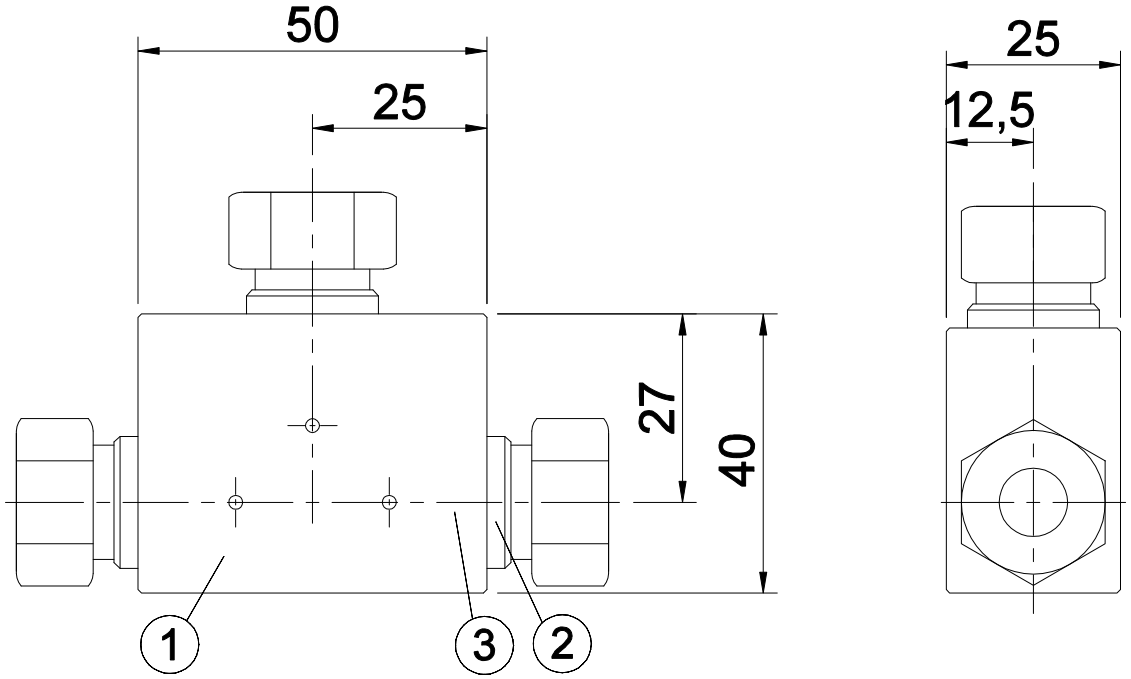

- SPECIFICATIONS

Catalog No.	Pressure Rating(PSI)	Port Type	Material	ORIFICE SIZE
FT60TS06	60,000	H6006	STS 316CW	Ø3.2

- Note
1. All dimensions for reference only and subject to change.

REV N0.	DESCRIPTION	DRAWING	REVIEWRED BY	APPROVED BY
0	FOR APPROVAL 06/17 K.Y.J	DESIGN SECTION		

Website	Main site : http://www.hiflux.com Shopping mall : http://www.hifluxmall.com					
4	-	-	-	-	-	-
3	COLLAR	60,000PSI 3/8"	FA60RS06	STS 316CW	3	EA	-
2	GLAND	60,000PSI 3/8"	FA60GS06	STS 316CW	3	EA	-
1	TEE	60,000PSI 3/8"	FT60TS06	STS 316CW	1	EA	-
ITEM	NAME OF PART	SPEC	Catalog No.	MATERIAL	QUANTITY	UNIT	REMARK
PART CODE		DESCRIPTION			FOR ONE SET		

MATERIAL LIST FOR ONE SET

No indication chamfer 0.2~0.4 X 45°

UNIT: MM

General tolerance is given in KS B ISO 2768-1

NORMINAL DIM.(MM)		
OVER	UNDER	TOL.
0.5	6	±0.1
6	30	±0.2
30	120	±0.3
120	315	±0.5
315	1000	±0.8
1000	2000	±1.2
OVER 2000		±1.5

CLASS OF FINISH

U = 50, 200S,
W = 12.5, 50S,
X = 3.2, 12.5S,
Y = 0.8, 3.2S,
Z = 0.2, 0.8S,

PROJECT: HIGH PRESSURE FITTING

TITLE: 60,000PSIG 3/8" TEE
FT60TS06

APPD BY	CHD BY	DED BY	DRN BY	WORK NO.	REV. NO.
	K.Y.J	K.Y.J	K.Y.J	HI-KYJ-260617-01	1
SCALE		DRN DATE		DWG NO. FT60TS06	

HIFLUX®